HAITIAN
PLASTICS MACHINERY

HAITIAN PLASTICS MACHINERY GROUP CO., LTD
No. 1688 Haitian Road, Xiaogang, Beilun, Ningbo, P. R. China.
+ 86-574-8617 7005 (China)
+ 86-574-8617 7242 (International)
haitian@mail.haitian.com
www.haitianpm.com

NINGBO HAITIAN HUAYUAN MACHINERY CO.,LTD.
Export Processing Zone, Ningbo 315800 China
+86-574-8617 7242
+86-574-8622 1864
haitian@mail.haitian.com
www.haitianpm.com

MULTI

HAITIAN MULTI-COMPONENT INJECTION MOLDING MACHINES

HYDRAULIC SOLUTIONS

HT 20220815-IV

Developments and trends of multi-component injection molding

Nowadays, multi-component injection molding requires much more than just the simple combination of two or more colors of plastics. It puts higher demands on injection molding machines in terms of product precision, aesthetic appearance, improved integration of different colors of plastics and product molding cycles, all of which can be applied to the production of plastic parts such as automobile tail lights, typewriter keys, instrument housings, packaging products and more.

Along with the improvement in people's daily life, the requirements for the quality of injection molded products have become higher and higher. High quality, multi-functionality, high volumes all while being environmentally sustainable have become the future development direction of the injection molding industry. Single-color, single-component plastic products have been challenged to meet people's diverse needs, so there are plastics containing two or more components on the same plastic part, such as mixed-color products, sandwich products, multi-layer products, etc.

Automotive

Electronics

Medical

Packaging

Consumer Goods

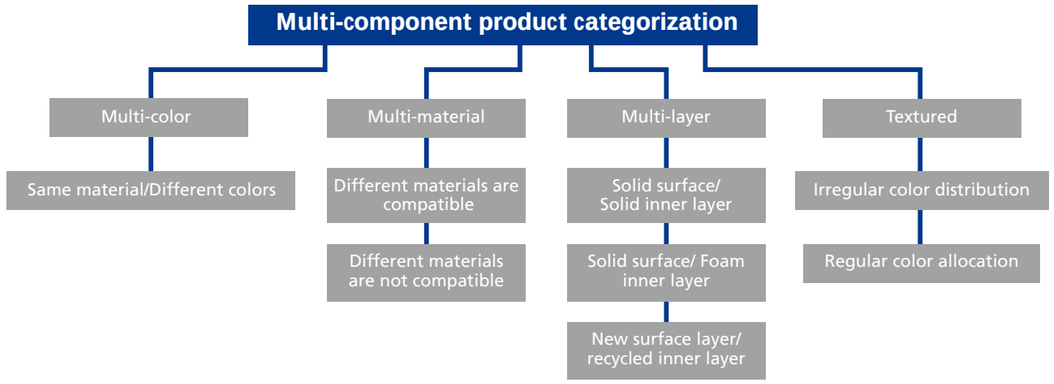

Material adaptability and adhesion intensity

Materials for multi-component injection molding must meet two basic conditions: adhesion compatibility and process compatibility. This table lists the main material combinations that are suitable for matching. If satisfied bond strength is still not obtained, the compatibility can be improved with appropriate additives.

	Materials	Thermoplastic																	Hard/soft compound								
		ABS	ASA	CA	EVA	PA 6	PA 6.6	PBT	PC	PE	PET	PMMA	POM	PP	PPO mod.	PS	PSU	Plasticised	SAN	TPE-A	TPE-E	TPE-S	TPE-U	TPE-V	EPDM	NR/SBR	SBR	LSR
Thermoplastic	ABS	■	■	■				■	■		■	■			■	■		■	■	■	■	■ M	■	■				
Thermoplastic	ABS/PC																			■	■	■ M	■	■				
Thermoplastic	ASA	■	■	■	■				■			■			■	■			■				■					
Thermoplastic	CA	■	■	■	■										■	■			■				■					
Thermoplastic	ENA		■	■	■					■				■		■												
Thermoplastic	PA 6					■	■			■			■							■	■	■ M	■	■	■	■	■	M
Thermoplastic	PA 6 (mod. +25 % GF)																			■	■	■ M	■	■				
Thermoplastic	PA 6.6					■	■	■	■	■			■			■				■	■	■ M	■	■	■	■	■	M
Thermoplastic	PA 6.6 (mod. +25 % GF)																			■	■	■ M	■	■				
Thermoplastic	PA 6.12																								■			
Thermoplastic	PA 12 (mod. + 25 % GF)																			■	■	■ M	■	■				
Thermoplastic	PBT						■	■	■						■					■	■	■ M	■	■	■	■	■	M
Thermoplastic	PC	■	■				■	■	■		■				■	■		■	■	■	■	■ M	■	■				M
Thermoplastic	PC/PBT																			■	■	■ M	■	■				M
Thermoplastic	PE	■	■	■	■	■	■		■	■		■	■	■		■				■	■	■ M	■					
Thermoplastic	PET	■									■		■						■	■	■	■ M	■	■				
Thermoplastic	PMMA	■	■							■		■			■		■	■				■ M	■					
Thermoplastic	POM	■	■			■	■			■	■		■	■		■		■	■	■	■	■	■					
Thermoplastic	PP	■	■	■	■	■	■		■	■		■	■	■	■	■		■	■	■	■	■	■ M	■	■			M
Thermoplastic	PPO mod.	■	■	■										■	■	■			■	■	■	■ M	■	■				
Thermoplastic	PPE mod.																								P	S	S	
Thermoplastic	PS	■	■	■	■	■	■		■					■	■			■	■	■	■	■ M	■	■				
Thermoplastic	PSU								■								■											
Thermoplastic	Pigid PVC																			■	■	■	■	■				
Thermoplastic	SAN	■	■	■				■	■		■	■	■		■	■		■	■	■	■	■ M	■	■				
TPE	TPE-E							■	■		■																	
TPE	TPE-U	■	■	■		■	■		■						■	■			■				■					
D	BMC																											
Elastomers	EPDM							■																	■			
Elastomers	NR																									■		
Elastomers	SBR																										■	
Elastomers	LSR																											■

■ Good adhesion ■ Poor adhesion ■ Non-adhesive
M Improved adhesion S Sulphur crosslinking P Peroxide crosslinking

Haitian hydraulic multi-component

Turntable molding applications

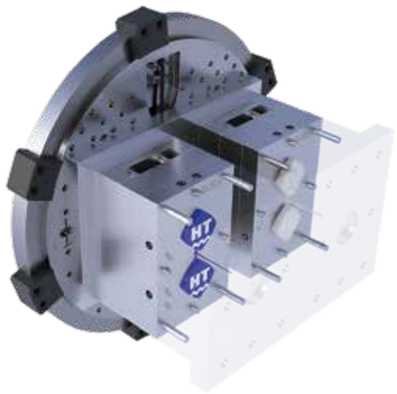

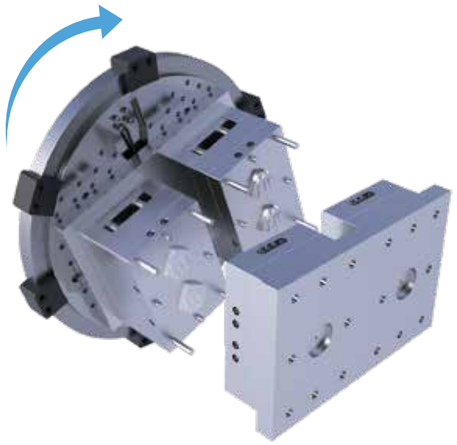

According to market demands, Haitian hydraulic rotary platen injection molding machines can be divided into: wide platen type, narrow platen type and rotary platen shaft common type. The turntable technology is a versatile and efficient solution that can meet the requirements of multi-component injection molding with both speed and accuracy. The rotary table is integrated into the appropriate injection molding machine as an auxiliary module of the moving platen, which can be flexibly used in multi-stage injection molds.

Wide platen turntable type

Mainly suitable for split mold (two mold frames + two cavities)

Narrow platen turntable type

The standard platen type, mainly suitable for the combined molds (one mold frame + two cavities)

Wide platen turntable and rotating shaft type

Provides customers with flexible solution to achieve a variety of processes

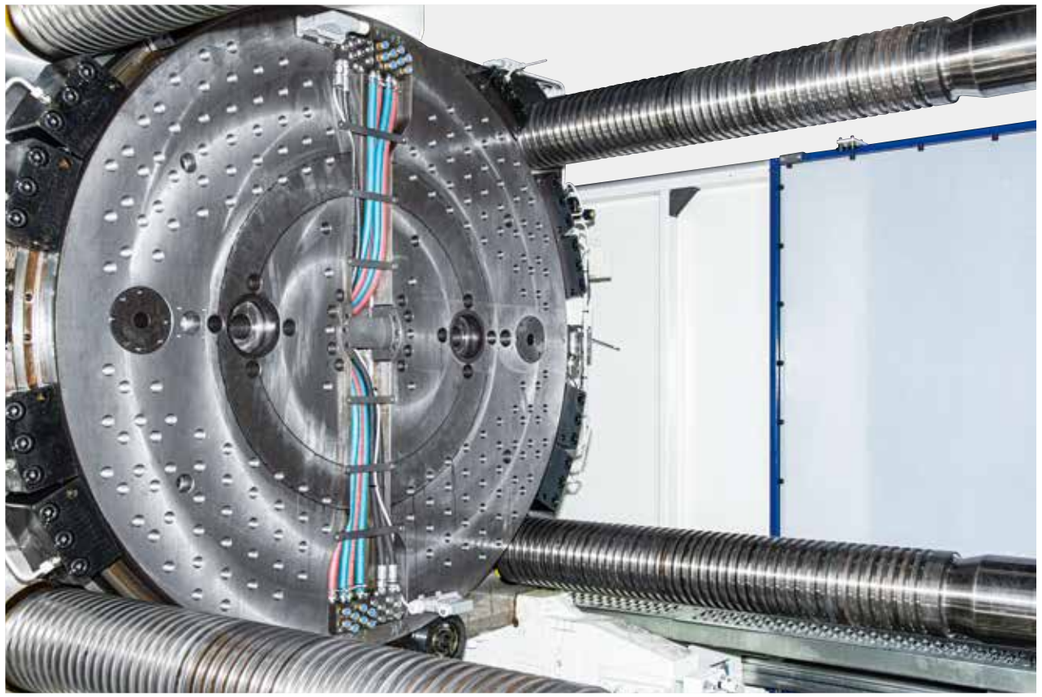

Accurate rotary bearing and positioning device

The rotary table adopts imported heavy load needle roller bearings, self-lubricating turntable axial limiting device and mechanical positioning device that can realize precise rotary positioning

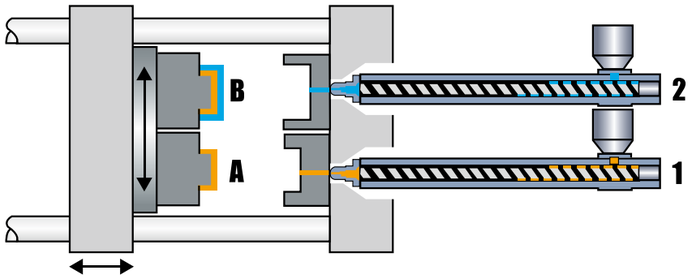

Working principle

Injection unit 1 and 2 are operating synchronously. The mold opens and the completed multi-layered product is ejected. The turntable rotates 180°, the mold is closed, and the injection molding of A material is completed at the same time that the injection molding of B material is completed. The turntable rotates 180° (forward and reverse)

Application Cases

Haitian hydraulic multi-component

Application of horizontal counter injection molding

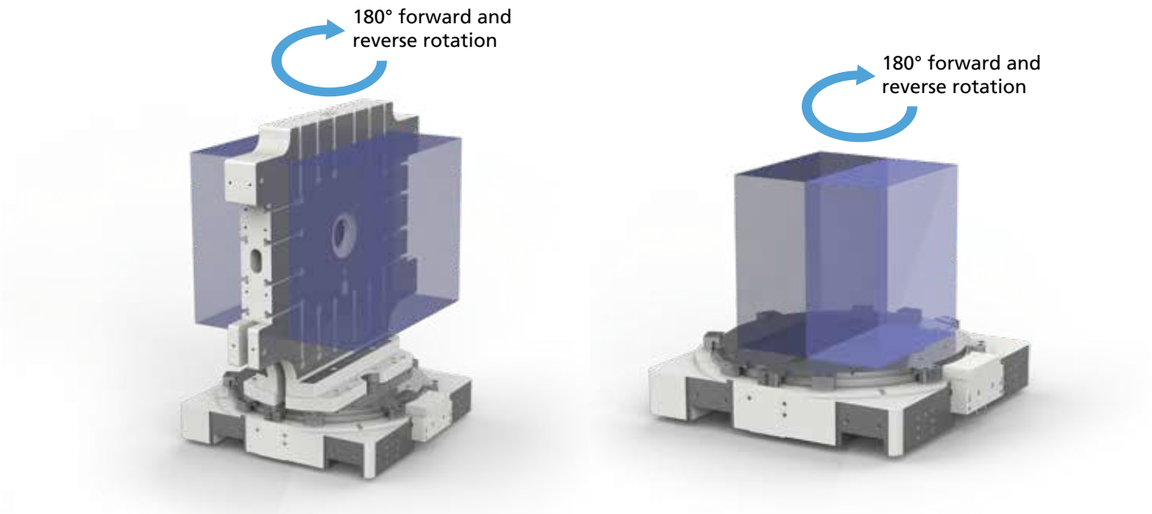

Haitian horizontal injection molding machines adopt horizontal turntable technology. The injection unit is respectively installed on one side of the moving platen and the fixed platen. The movable horizontal turntable or the rotating mold is supported by its own base frame, so the mold design is more compact. In order to meet the needs of large two-color products, it can be used as two single-color injection molding machines.

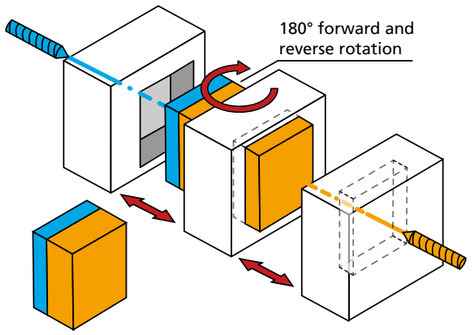

Working principle

When opening the mold, the turntable system rotates 180° around the vertical axis. Then the mold closes for the secondary injection. Instead of a two-sided mold, also a four-way cubic mold can be used (90 degrees rotation). Depending on the cubic mold design even an efficient one-component mass production solution can be achieved.

Tie Bar Force Diagramm

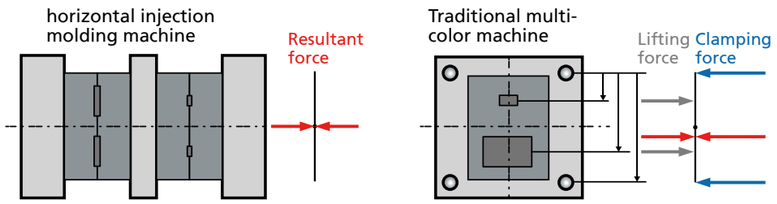

More efficient output and more uniform force compared to traditional multi-color machines.

Horizontal rotary type

Horizontal counter injection type	JU7500M	JU9000WM	JU10800WM	JU13000WM	JU16000WM	JU24000M	JU28000M	JU33000M
Inner tie bar distance mm	1110×960	1260×1100	1445×1190	1595×1310	1885×1440	2020×1620	2185×1755	2270×1900
Maximum opening distance mm	2700	2950	3320	4140	4390	5000	5200	5600

Main characteristics

- Larger mold space
- Higher load-bearing capacity
- More reasonable distribution of cavities, which is beneficial to the structural design of the mold
- More reasonable distribution of mold cavities, more uniform force distribution on the mold

Main application fields

Large home appliance panels, automotive light guides bars, headlights, bottom shields, sunroofs, interior parts, etc

Haitian hydraulic multi-component

Application of rotary shaft molding machine

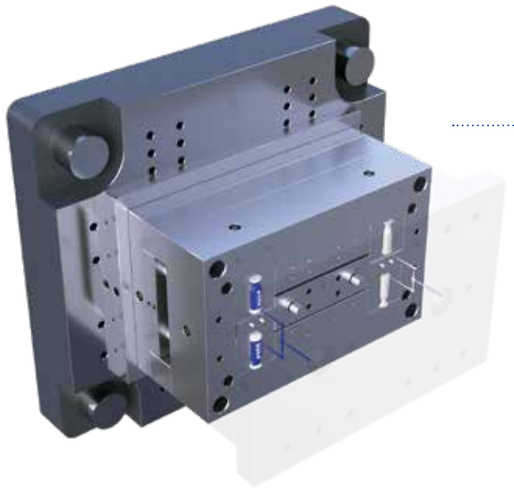

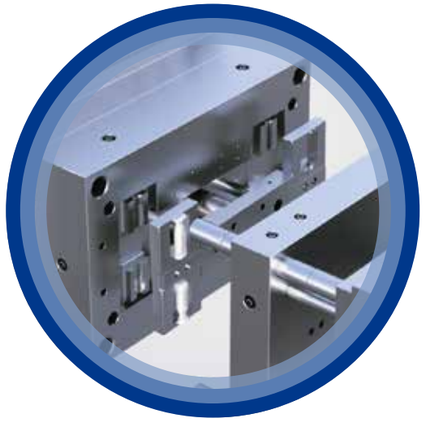

The rotary shaft multi-component injection molding machine is developed for the demand of fully overmolded and penetration type products with a rotary shaft two-color injection molding process. The cavity transformation is realized by the mold's core rotation, which rotates and transfers the parts into different cavities on both sides. Realizing complex designs of multi-component parts while getting rid of the limitations of injection molding machines, it ensures high product appearance quality while improving the production efficiency.

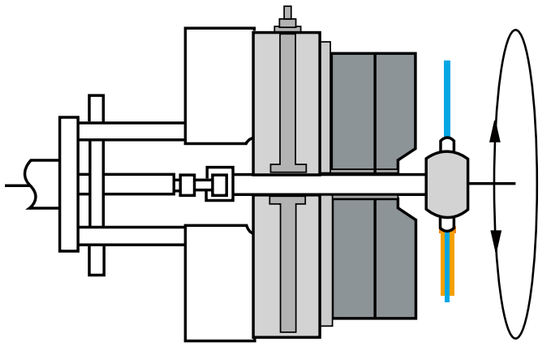

Working principle

Injection Unit 1 and 2 work in parallel. Product is ejected after injection, and rotates through the shaft by 180 degreesmake this a period instead of a comma. After the rotation is finished, the mold is closed, while material A completes the injection, material B also completes the injection. The mold is opened, and the rotating shaft (core + workpiece) is reversed 180 degrees °. Then the process is repeated.

Unique shaft component design

The auxiliary platen is equipped with the mold positioning center, the auxiliary platen center is consistent with the rotation center of the rotating shaft, and the rotating shaft is equipped with the cooling water interface required by the mold.

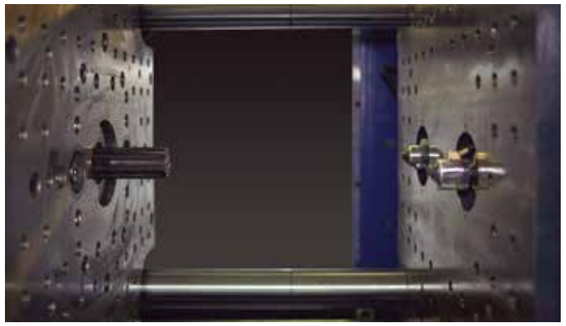

Accurate positioning of the rotating shaft

The system of shaft control and rotation control of precise servo motor, synchronous belt and spline drive control, accurate positioning of shaft rotation, good repeatability and high reliability.

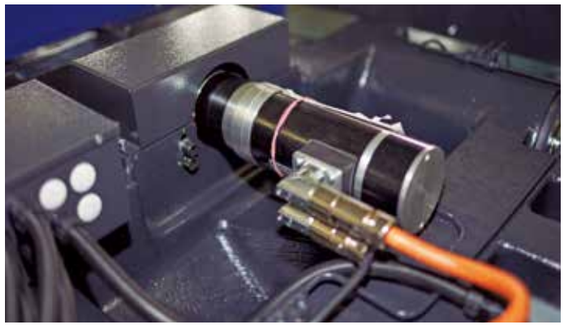

High precision water quality filtration system

Equipped with high-precision water quality filter to improve the service life of the seal of the rotating shaft rotary joint.

Application cases

Haitian hydraulic multi-component

Sandwich/multi-color mixing molding applications

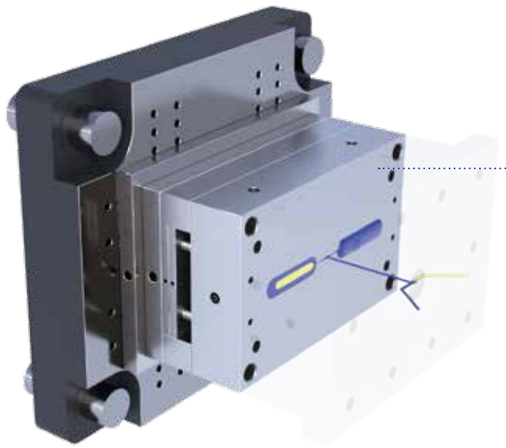

This type is equipped with a splitting valve at the front of the nozzle. Through the programmed control valve spool action, according to the number of alternate actions of the splitting valve spool, two functions of sandwich injection and color mixing injection can be realized, and it can also be used for the production of single-color products.

Sandwich Injection:

The product has a typical three-layer structure. After the injection of the skin material, the core material is accurately filled through the distributing valve at the top of the nozzle, and finally the skin material sealing product is injected again to make it completely covered.

Multi-color injection:

Different colors can be matched to achieve special flow patterns, such as zebra or leopard patterns. Programmable logic timing precisely controls the opening and closing of the valve, making it possible to repeat the production of products with the same flow pattern in large quantities.

Working principle

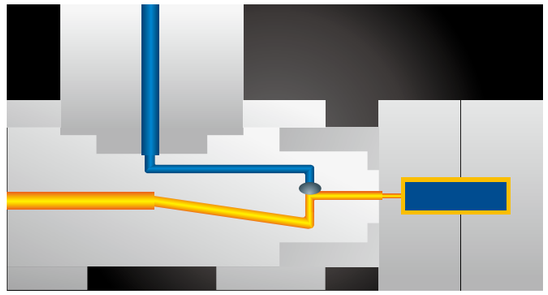

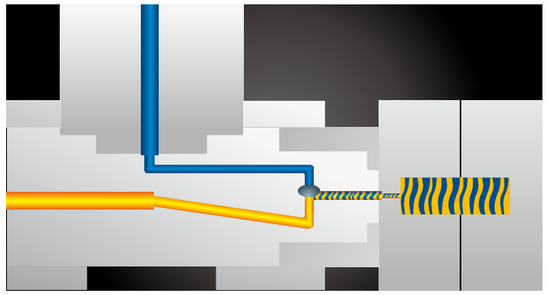

Features and advantages

- **Reduce production cost and increase added value of products**
  Core layer materials can be replaced by secondary materials, recycled materials or other low-cost methods
- **Improve the visual appearance of products**
  For transparent products, sandwich injection molding can be used to achieve the color effect of the core material
  For mixed-color products, special flow effects can be achieved through color matching
- **Reduction of internal stress and improvement of part quality.**
  The core component provides significant improvement of the part quality as it reduces internal stress and strengthens the stability, therefore it ensures that the produced parts meet their application requirements.

Basic sandwich / multi-color injection moulding process

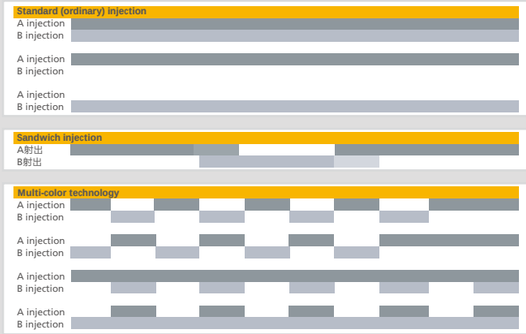

Application cases

Haitian hydraulic multi-component

Co-injection molding applications

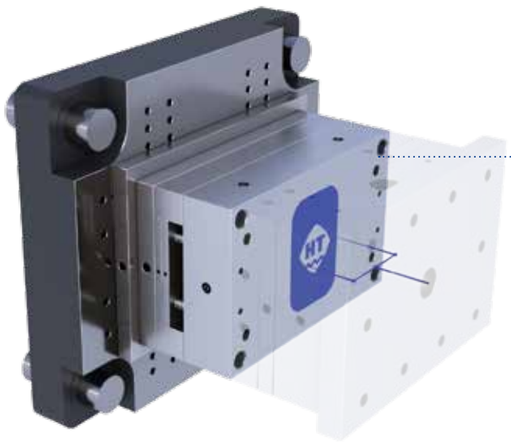

Constructed according to customer demands, its clamping unit does not contain a turntable nor a rotating shaft. The machine provides an independently controlled injection unit with the mold's core displacement action to achieve two-color injection.

Features and advantages

- Single color as well as a multi-component usage
- Both injection units can be controlled and switched off independently, which reduces energy consumption.
- Requires more floor space than the standard machine.

A variety of co-injection application solutions

Using core pulling applications

After the first injection process and the product cooled down to a certain hardness, the hydraulic system will draw the core to make the partial core sink to form a secondary cavity with the same shape as the core, and then do the second injection for co-molding.

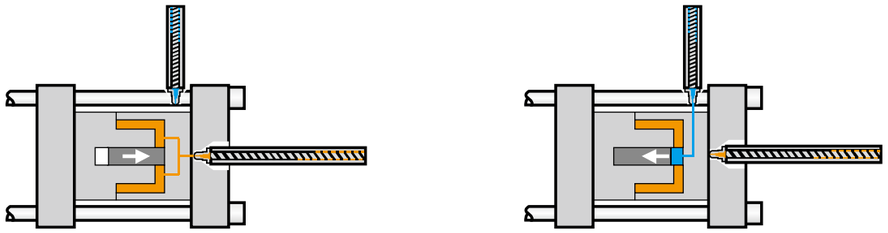

Two-gate applications

Two kinds of materials are injected into the same mold cavity simultaneously or in sequence through two gates. After meeting in the mold cavity, one or more adhesive lines are formed.

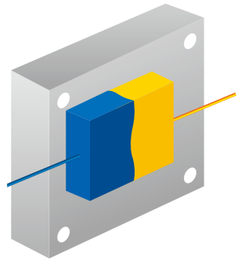

Robot Transfer Application

Semi-finished products can be directly transferred to the finished mold cavity or other machines through a robot, which can be easily applied in small batch production, large products or other special solutions.The robot puts the semi-finished product(s) into different cavities and then the machine can inject them layer by layer to reduce the pressure holding and cooling time, and finally greatly compress the production cycle and improve the production efficiency.

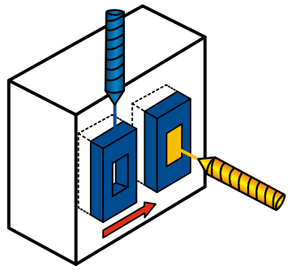

Optimal price performance of product series

Diversified application solutions

Haitian provides a wide variety of structural combinations to meet almost any multi-component application. In addition, you can also combine the actual production needs and conditions, flexible choice of appropriate solutions, thus saving time and investment costs. Our experienced technology application experts are ready to answer your questions and recommend solutions that meet your individual needs.

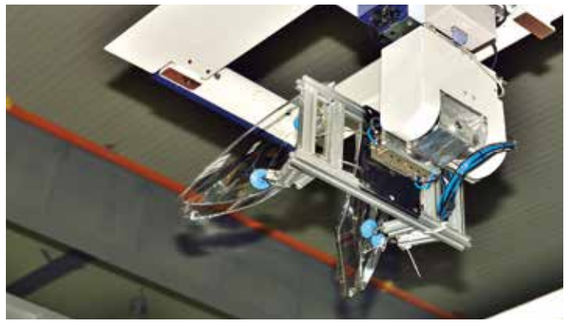

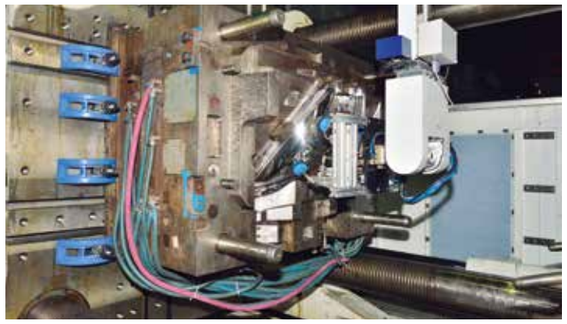

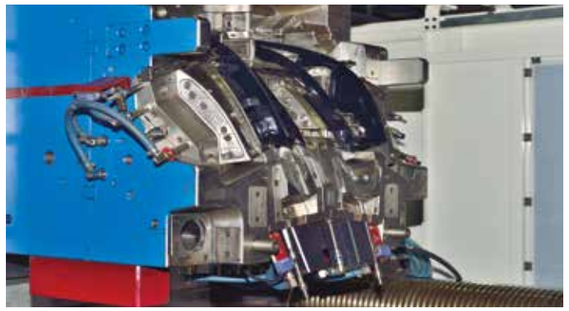

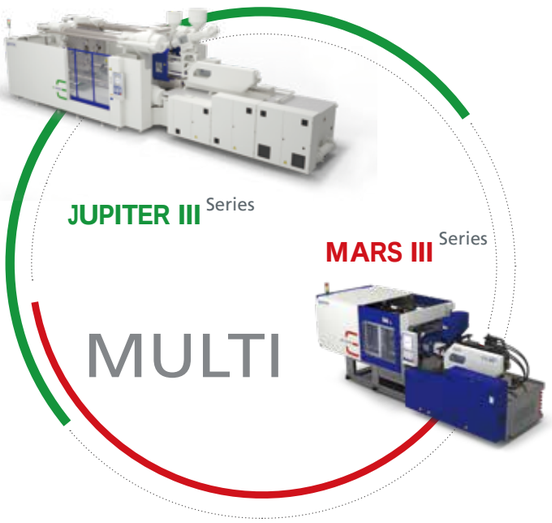

L Horizontal structure

Characteristics

- » Suitable for a wide range of applications, especially for large injection volume products
- » Easy to operate and maintain
- » Nozzle position of the secondary injection unit is adjustable
- » Can be used as a single material application

Limitations

- » Large footprint

V Vertical structure

Characteristics

- » Small footprint
- » Nozzle position of the secondary injection unit is adjustable
- » The secondary injection unit is easier to be installed in the later stage
- » Can be used as a single material application

Limitations

- » Only suitable for small injection volume products
- » Height restrictions

MODULARITY

The hydraulic injection units from Haitian were designed as independent modular components with their own power and drive sources.They can be adapted to different machine models for increased flexibly across several machines on your production floor.

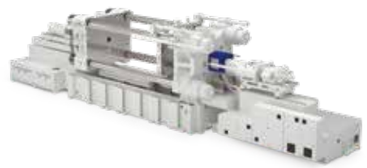

P Parallel injection structure

Characteristics

- » High degree of specialization of multi-material
- » Small footprint
- » Easy operation and maintenance
- » Machine side automatic installation, user friendly
- » Easy access to mold area

Limitations

- » Not applicable for all covered molded products

R Piggyback structure

Characteristics

- » Small footprint
- » Machine side automatic installation, user friendly
- » Easy access to mold area
- » Single and multi-material usage

Limitations

- » Customized production required

A Aspectant (opposing) structure

Characteristics

- » Significant increase in mold area utilization
- » Significant reduction in clamping force requirements

Limitations

- » Customized production required

Multi-component injection unit layouts

Type		Injection pattern	Description	Graphic
Two-color combination mode	Parallel double color	Parallel double injection	P	
	Horizontal right Angle bicolor	Single injection + horizontal injection	L	
	Top-side right Angle bicolor	Single injection + vertical injection	V	
	Double color piggyback	Single injection seat + oblique back injection	R	
	Opposite color injection	fixed platen single injection + tail platen single injection	A	
Three-color combination mode	Horizontal right Angle tricolor	Parallel double injection + horizontal right Angle injection	P+L	
	Top-side right Angle tricolor	Parallel double injection + vertical right Angle injection	P+V	
	Independent three color	Single injection + horizontal Angle injection + vertical Angle injection	L+V	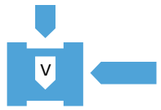
	Tricolour piggyback	Backpack double injection + horizontal right Angle injection	R+L	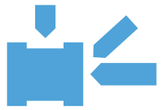
	Tricolour piggyback	Pack type double injection + vertical injection right Angle	R+V	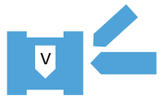
	Opposite horizontal right Angle	fixed platen single injection + tail platen single injection + horizontal right Angle injection	A+L	
	Opposite vertical 3 colors	fixed platen single injection + tail platen single injection + vertical right Angle injection	A+V	

Type		Injection pattern	Description	Graphic
Four color combination mode	Rectangular four color	Parallel double injection + horizontal Angle injection + vertical Angle injection	P+L+V	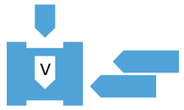
	Four colors knapsack	Pack type double injection + horizontal Angle injection + vertical Angle injection	R+L+V	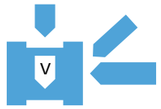
	Opposite side four color	fixed platen single injection + tail platen single injection + horizontal right Angle injection + vertical right Angle injection	A+L+V	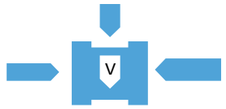
	Parallel and vertical four colors	Parallel double injection + vertical double injection	P+V+V	
	Parallel horizontal right Angle four colors	Parallel double injection + horizontal Angle double injection	P+L+L	
Five color combination mode	Parallel vertical horizontal right Angle five colors	Parallel double injection + vertical double injection + horizontal right Angle injection	P+V+V+L	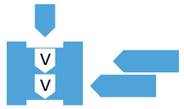
	Parallel vertical horizontal right Angle five colors	Parallel double injection + vertical right angle injection + horizontal right angle double injection	P+V+L+L	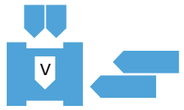
	Knapsack vertical horizontal right angle five colors	Backpack double injection + vertical right angle double injection + horizontal right angle injection	R+V+V+L	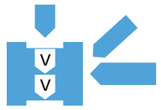
	Knapsack vertical horizontal right angle five colorsc	Backpack double injection + vertical right angle injection + horizontal right angle double injection	R+V+L+L	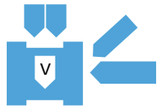

L Type

Right angle horizontal structure

Specifications

L-type injection unit		50		80		160			280			380			570			720			1050			1300			1750			2400			3050		
Screw diameter	mm	19	22	22	26	26	30	34	32	36	40	36	40	45	40	45	50	45	50	55	50	55	60	55	60	65	60	65	70	65	70	75	70	80	85
Theoretical injection volume	cm³	21	36	38	53	66	88	113	122	155	191	173	214	270	251	318	393	334	412	499	471	570	679	618	735	863	792	929	1078	1068	1239	1423	1424	1860	2100
Injection weight (PS)	g	19	33	35	48	60	80	103	111	141	174	157	195	246	228	289	358	304	375	454	429	519	618	562	669	785	721	845	981	972	1127	1295	1296	1693	1911
Injection rate (PS)	g/s	55	73	55	77	53	71	91	86	109	134	106	131	166	128	162	200	160	198	239	183	222	264	249	296	348	286	335	389	277	321	369	363	474	535
Plasticizing rate	g/s	2.5	3.6	3.6	6.4	6.1	8.3	11.2	10.1	13.3	16.1	14.9	18.2	24.1	17.8	23.7	29.7	21.4	27	33.1	29	35.6	42.1	38.7	45.8	51	51.1	56.7	64.4	46.7	53.6	60.8	56.8	74.8	82.3
Injection pressure	MPa	234	175	232	166	240	180	140	236	187	151	222	180	142	228	180	146	222	180	149	231	191	161	214	180	153	222	189	163	229	198	172	216	165	146
Screw speed	rpm	300		300		240			240			240			220			180			185			215			225			180			175		
Motor power	kW	13		13		13			15			18.5			22			30			37			45			55			55			65		
heater power	kW	4.3	4.2	4.9	6.8	6.9			10.5			12.4			12.4			16.3			22			25.5			33			32			37		

L-combination table

Unit: mm

Clamping Unit \ Auxiliary injection unit	50	80	160	280	380	570	720	1050	1300	1750	2400	3050
MA1600Ⅲ		165										
MA2000Ⅲ		185	185									
MA2500Ⅲ			200	200								
MA2800Ⅲ			220	220								
MA3200Ⅲ			240	240	240							
MA3800Ⅲ				255	255							
MA4700Ⅲ				290	290	290						
MA5300Ⅲ				295	295	295	295					
JU6500Ⅲ					365	365	365	365				
JU7500Ⅲ						390	390	390				
JU9000Ⅲ						415	415	415				
JU10800Ⅲ						445	445	445	445			
JU12000Ⅲ						455	455	455	455	455		
JU13000Ⅲ						485	485	485	485	485	485	
JU14000Ⅲ						510	510	510	510	510	510	
JU16000Ⅲ							545	545	545	545	545	
JU18500Ⅲ									580	580	580	580
JU21000Ⅲ											630	630
JU24000Ⅲ											665	665
JU28000Ⅲ												700
JU33000Ⅲ												

Note: The above injection combination , Preferred (data in brackets represents D size) , Optional, for further requirements please contact us

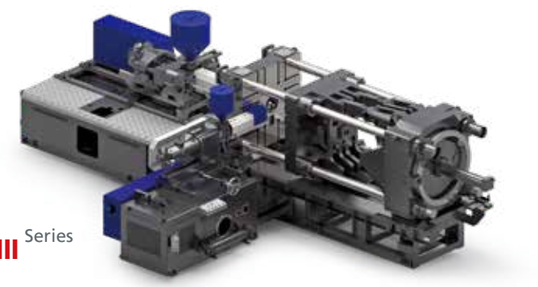

MARS III Series

Characteristics

- Flexible combination, applicable to all Haitian machines
- Compact and robust mechanical structure
- Adjustable nozzle position of the secondary injection unit
- Easy and fast implementation
- Control system of secondary IU integrated into the main control system
- The overall color of the auxiliary injection unit follows the main injection unit.

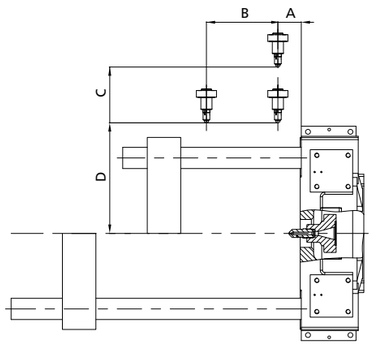

Injection unit moving position parameter

Unit: mm

Injection Unit	A	B	C
50	90	230	610
80	100	230	610
160	100	230	710
280	110	230	710
380	110	300	870
570	115	300	870
720	130	300	870
1050	145	300	870
1300	150	380	870
1750	150	380	870
2400	150	380	870
3050	160	380	870

A: Minimum distance from the nozzle center to the fixed platen
B: Movable stroke of the injection unit can be adjusted (the direction of opening and closing the mold)
C: Nozzle stroke
D: The minimum distance from the tip of the nozzle to the center of the platen

Note: D size changes with the combination method. The preferred combination data is shown in the table on the left. If you have other combination data requirements, please contact us.

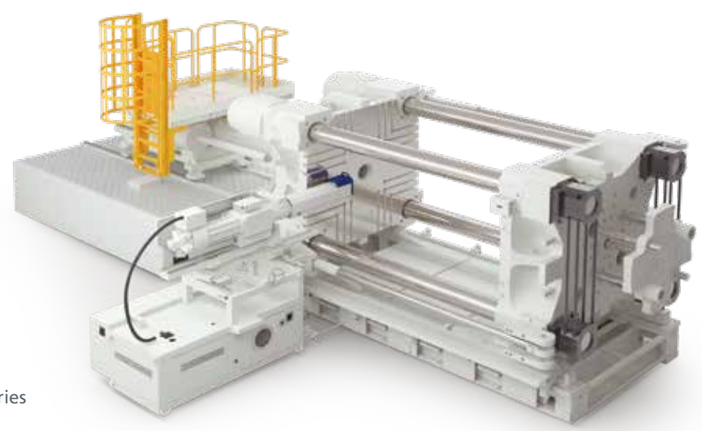

JUPITER III Series

V Type

Vertical structure

The hydraulic vertical structure is an ideal modular system for a variety of multicolor applications with high automation and mold adaptability. It can be used in relatively small injection molding machines, even for large molds commonly used in multi-material technology, requiring only a clamping force increase.

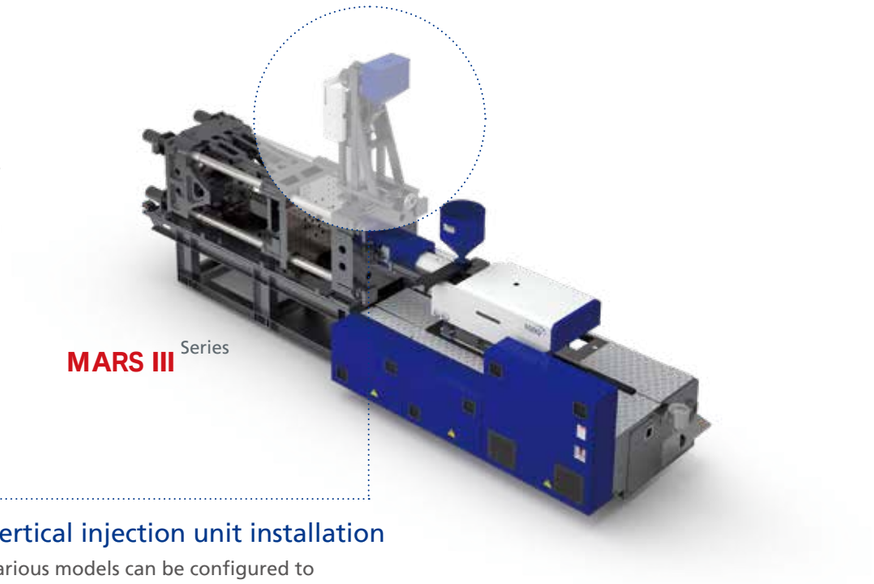

MARS III Series

+

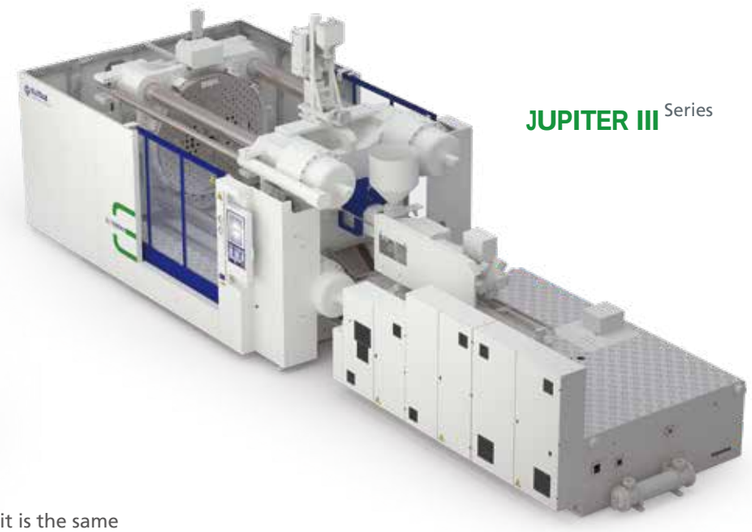

JUPITER III Series

Vertical injection unit installation

Various models can be configured to enhance the application range, easily transforming single component machines into multi-component solutions, saving time and creating higher efficiency.

Note: the color of secondary injection unit is the same as that of the main injection unit.

Parameter Overview

V-injection unit		50		150			390		
Screw diameter	mm	19	22	26	30	34	36	40	45
Theoretical injection volume	cm³	21	36	66	88	113	173	214	270
Injection weight (PS)	g	19	33	60	80	103	157	195	246
Injection rate (PS)	g/s	38	51	55	74	95	103	127	161
Plasticizing rate	g/s	2.5	3.6	6.1	8.3	11.2	14.9	18.2	24.1
Injection pressure	MPa	244	182	231	173	135	229	186	147
Screw speed	rpm	300			240			240	
Motor power	kW	13			13			18.5	
heater power	kW	4.3	4.2		6.9			12.4	

Injection unit moving position parameters

unit: mm

Injection equivalent	A	B	C	D	E	F
50	95	180	180	130	1320	120
150	95	180	300	260	1640	130
390	120	250	400	325	2065	165

A: Minimum distance from nozzle center to fixed platen
B: Adjustable moving stroke of injection unit (mold opening/closing direction)
C: Nozzle stroke
D: Maximum depth of nozzle tip into top surface of fixed platen
E: Maximum height of injection unit
F: Distance from nozzle center to outer edge of injection unit
Note: D and E data are based on the top mounting surface of the fixed platen.

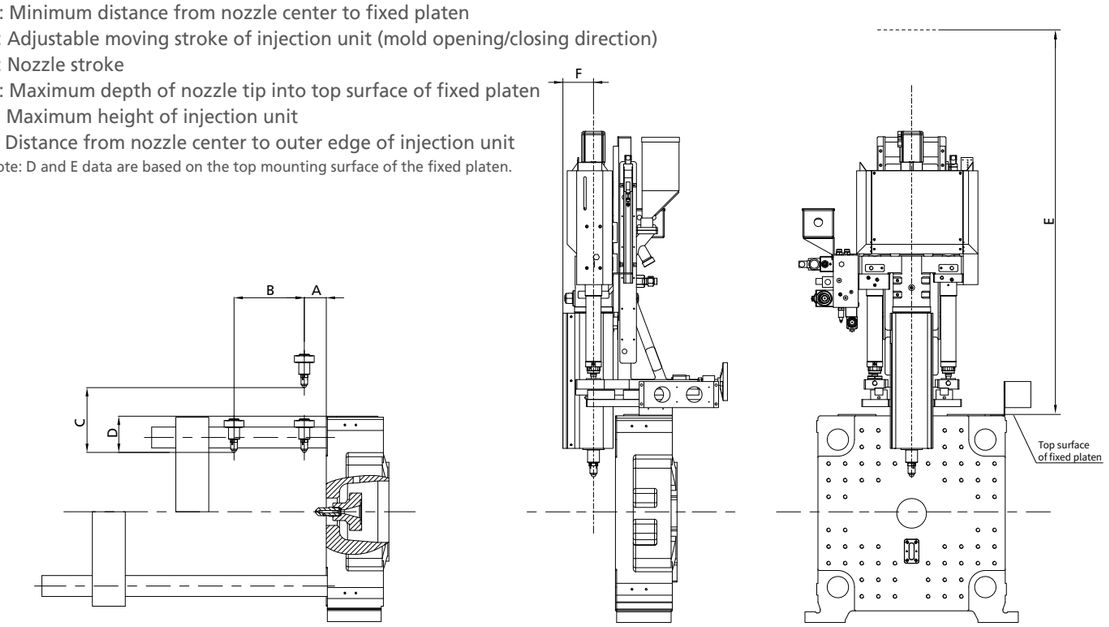

R Type

Piggyback structure

The piggyback structure is an ideal choice for large, super long multi-material products or highly complex parts required by the automotive industry. It has the characteristics of high injection speed / high injection pressure, small floor area and large mold space.

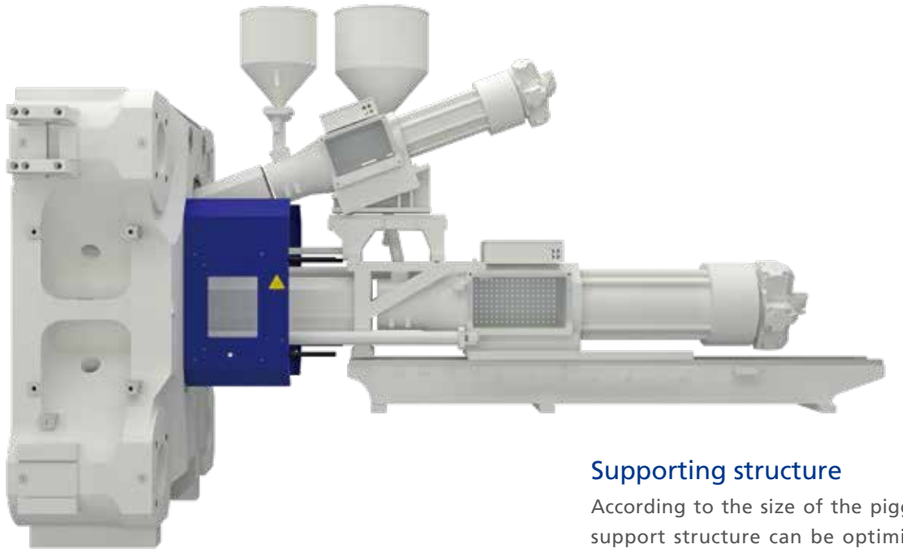

Supporting structure

According to the size of the piggyback injection unit, the support structure can be optimized in various ways (the specific structure is subject to the machine), to achieve high rigidity and stability in the injection process.

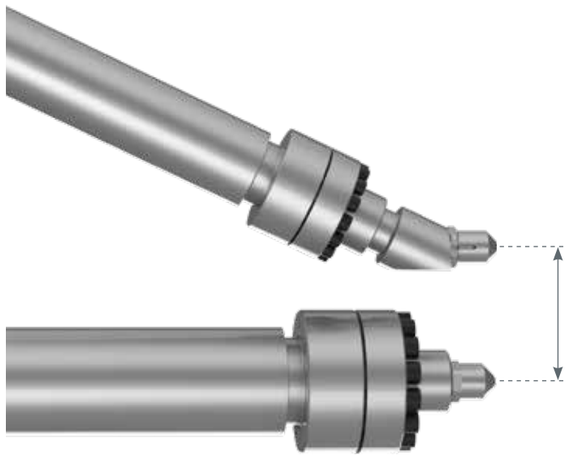

The center distance of nozzle can be adjusted. In case of further customization requirements, please contact us.

R Type machine range

JU III clamping unit	Injection center distance mm	Auxiliary Injection Unit / Main Injection Unit	380	570	720	1050	1300	1750	2400	3050
JU7500M	300	1050								
	300	1300								
	300	1750								
	300	2400								
	300	3050								
JU10800M	300	1300								
	300	1750								
	300	2400								
	300	3050								
	300	4650								
JU14000M	300	1750								
	300	2400								
	300	3050								
	300	4650								
	300	6600								
JU18500M	300	2400								
	300	3050								
	300	4650								
	300	6600								

Note: the above injection combination， Preferred， Optional; Special center distance and combination

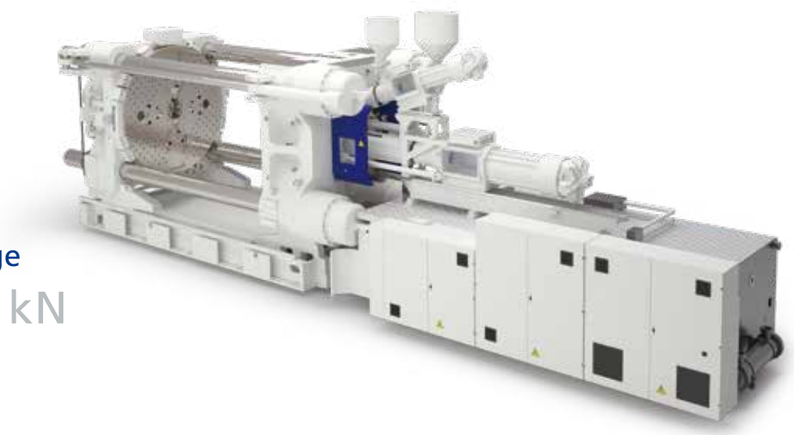

Clamping force range

7,500-18,500 kN

Control Unit

Intelligent Technology featuring MOTION +

MOTION PLUS

- As an important part of "MOTION+", the electronic control unit is process oriented and offers compatibility with various common communication protocols.
- The self-developed "J6 control system" (shown below) is the intelligent key hardware of "MOTION+". Through the screening, cleaning, reconstruction, buffering, and forwarding of a large amount of process data, it effectively reduces the system load and provides operation reliability.
- With the help of brand-new digital technology, the independent control of movement through sensors and optimized algorithms for key process parameters, the "J6 control system" has achieved an overall improvement in the accuracy and response of part motion.

- J6 control system

New generation of control system

- Multi-PID control for different applications parameters and operating conditions for more accuracy and efficiency.
- Power system integration based on EtherCAT bus with high signal accuracy and anti-interference capability.
- Linux operating system for better compatibility and third-party software integration.
- Expandable with the latest OPC UA communication protocol, fully compatible with the latest international and domestic communication standards.
- Servo control system, intelligent sensor and other important equipment status parameters are quantified and displayed, making the equipment more user-friendly.
- A new generation of intelligent algorithms that can effectively sense process deviations and compensate for them in real time, ensuring the stability of process results.
- The combination of centralized control and edge computing, modular control of key functions, good system flexibility, scalability, and tailoring, taking into account general performance and flexibility.
- New dynamic temperature control algorithm.

PROGRAM FUNCTION (PARTIAL)

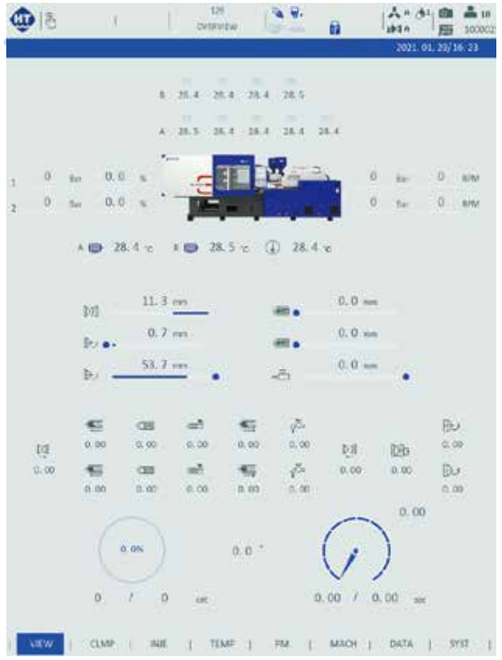

15-inch touch screen display, equipped with a dedicated multi-component controller, latest and easy-to-operate control system with a faster response cycle time.

core free timing editing function

Independent and user friendly core-setting, covering process requirements of most customers.

Optional features

Haitian multi-component optional functions provide customers with more options to meet their application requirements, and improve the quality and precision of the products.

- Clamping mechanism and injection mechanism size matching
- Servo-electric driven turntable
- Mold temperature control device
- Injection servo closed loop control
- Proportional injection control
- Proportional control of mold opening and closing
- Pneumatic core
- Glass tube cooling water flow meter
- Sequential valve gate (pneumatic/hydraulic)
- Closed loop control of discharge port temperature
- Mold hot runner control
- Machine side automation equipment
- More groups of core functions
- E67 robot interface
- E70 Magnetic platen interface
- E12 robot interface
- OPC DA data interface
- Mold positioning ring
- 3 in 1 material preparation dryer
- Cold/hot all-in-one mold temp controller
- Conveyor belt

Electric turntable (optional)

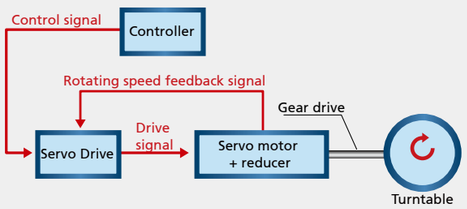

Schematic diagram of electric rotating turntable

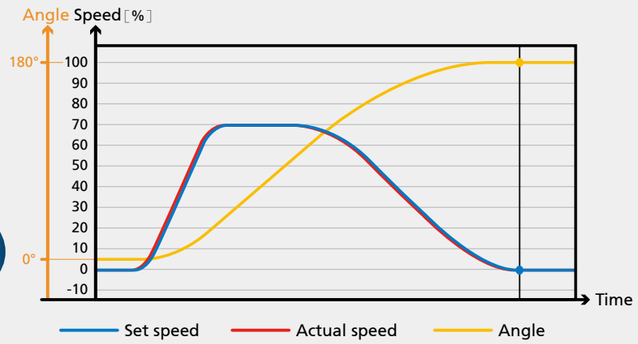

Waveform of electric turntable

- Asymmetrical S-curve: gentle deceleration, easy to follow, more substantial improvement in positioning time than symmetrical S-curve
- Self-learning: friction self-learning, fast and accurate positioning
- Self-calibration: self-calibration of the mechanical position of the turntable, without risk of machining errors;
- Self-adaptation: Self-adaptation for different inertia

①

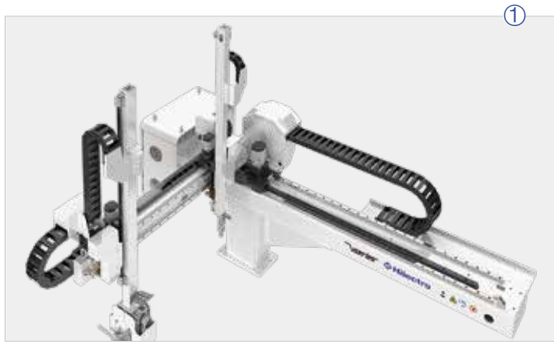

②

③

④

⑤

Picture 1: Robot
Automated part pickup and automated production for diversified products and multi-component applications

Picture 2: Intelligent auxiliary equipment
Optional intelligent auxiliary equipment to adapt to machine side automation

Picture 3: Injection servo valve
High injection repeatability accuracy and fast response speed

Picture 4: Mold opening and closing proportional valve
Faster mold opening and closing speed and higher accuracy

Picture 5: Expansion interface
Hot runner, core, time-controlled valve and other interfaces